AF/SP-1 (NEC All Flash Simple Programmer-1)

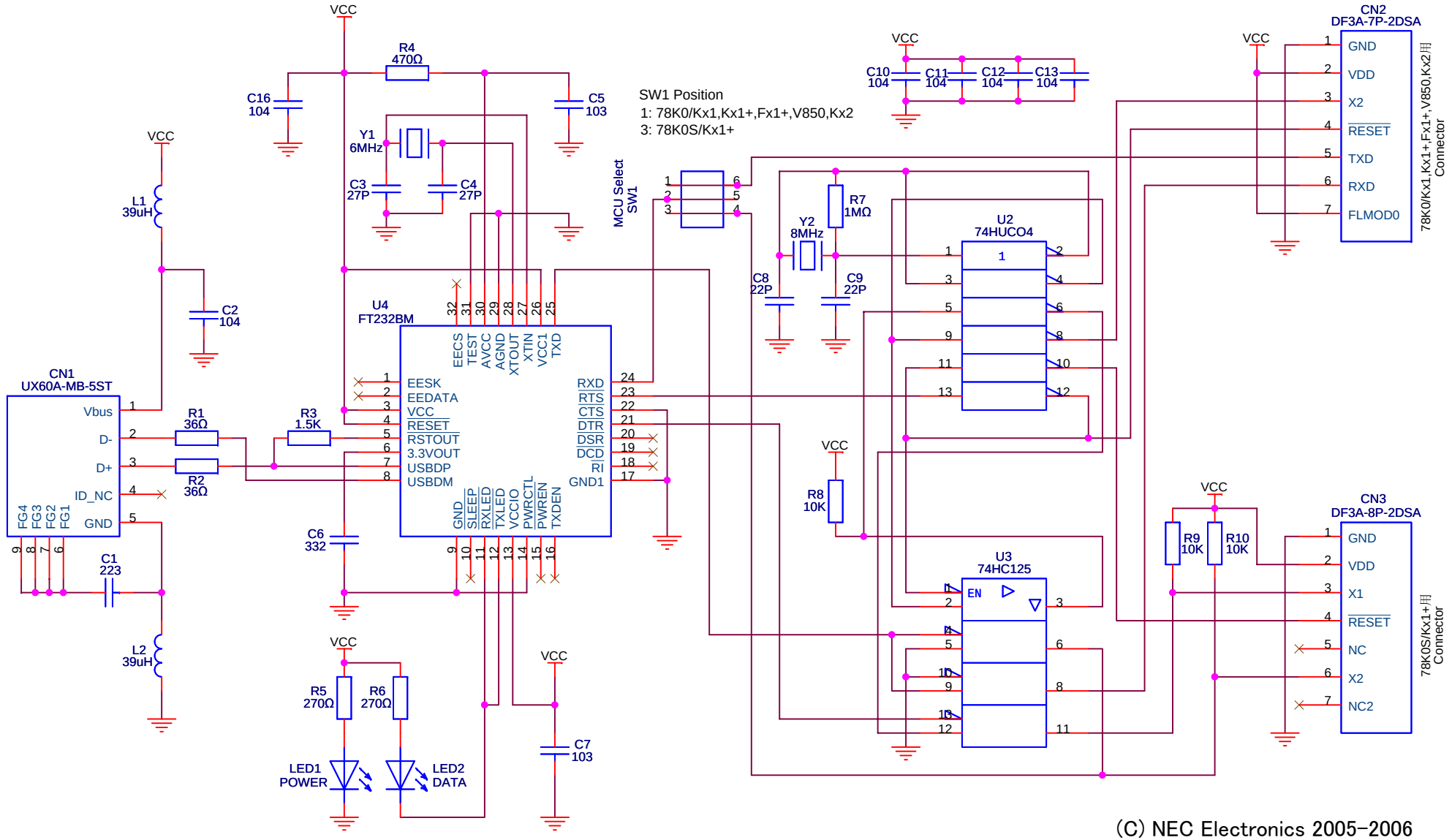

(C) NEC Electronics 2005-2006

www.8051faq.com.cn TEL:0755-61361234

Title	NEC All Flash 单片机简易USB I/F 烧写器原理图	
Size A4	Document Number	Rev V1
Date: Tuesday, March 07, 2006	Sheet 1 of 1	